DGX Demolition Grapple

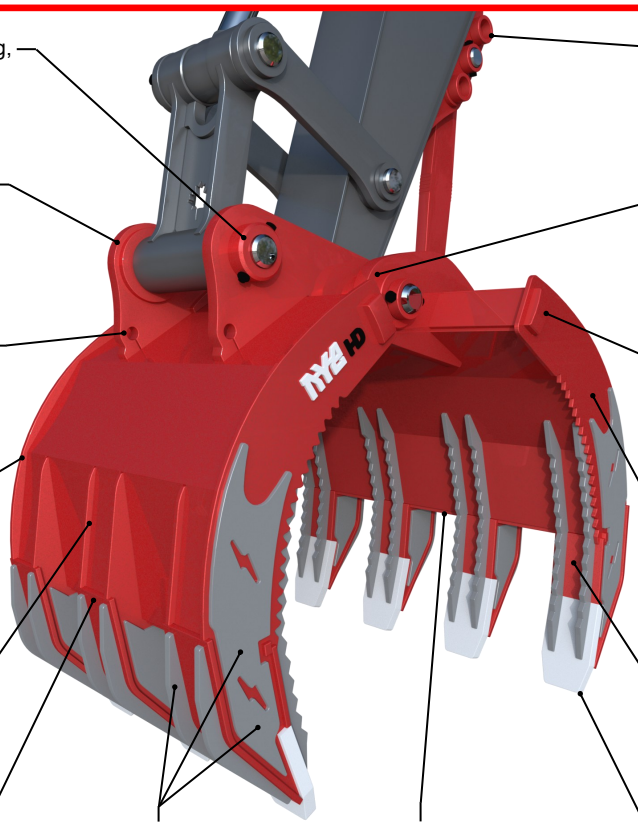

Pins - Super Strong, heat treated alloy steel.

Mounting Eyes - Extra thick plates resist twisting and deformation.

Utility Lugs - For lifting, turning, pulling, etc.

Tines - QT100 tines extend from the tips to the bridge beam. They do not stop part way.

Skins - Extra thick outer skins top to bottom.

Wear Plates - Extra thick AR400 in this critical abrasion area.

Optional Abrasion Kit* - AR400 wear plates for extra long life under abrasive conditions.

Occlusal Bar - Ties all tines together. Meets flat on the tine plates to allow wire and re-bar pulling.

Tips - Extra heavy AR400 weld-on tips.

Tine Plates - Extra thick AR400 material to absorb twisting and prying forces.

Side Plates - QT100 serrated for extra grip, extend all the way from the tips to the bridge beam.

Bridge Beam - Solid steel bridge for maximum strength, eliminates twisting.

Bushings - Extra thick wall alloy bushings, keep grapple together during pin change.

Bracket - Heavy duty three position bracket and brace with oversize pins.

Features & Benefits

- Extra strong construction, designed for demolition work.
- Weld-on hardened steel tips for long life.
- Optional shear plates for extra wood waste and garbage crushing ability*.
- No extra valves or hoses required.
- Quick coupler models available.
- Optional Hydraulic Brace*.

Marine



Demolition



Proven Tough



DGX Series Typical Specifications

Carrier	Model	Jaw Config.	Weight kg [lb]
16 - 24 t	DGX207	3/4	1,475 [3,250]
22 - 28 t	DGX257	3/4	1,850 [4,100]
26 - 38 t	DGX357	3/4	2,475 [5,450]
35 - 50 t	DGX457	3/4	3,325 [7,350]
48 - 60 t	DGX607	3/4	4,225 [9,300]
59 - 90 t	DGX857	3/4	5,400 [11,900]

* - Optional (parts shown in light grey)

nye.ca/dgx

All Nye products are warranted to be free of defects in materials and workmanship for a period of 2 years or 2,000 hours.
Specifications subject to change.

nye.ca/terms

Nye DGX Demolition Grapple:

These premium quality grapples are designed for the most severe demolition, rock and waste handling applications.

Fully boxed design, made from continuous T1 structural plates that extend from the tips all the way to the bridge beams.

The tines are exposed through the back skin to provide extra wear and impact resistance.

The continuous tine design makes Nye grapples the strongest in the world, our superior performance under the worst conditions proves this claim.

Nye grapples are simple to install, pin on in place of your normal bucket, back brace welds to underside of dipper stick.

For more information:

Call 905 897 2311 or visit **nye.ca**.

Nye Manufacturing Ltd.
3585 Mavis Rd.
Mississauga, ON L5C 1T7
Canada
+1 905 897 2311
sales@nye.ca nye.ca

Nye is a proud family owned Canadian business; going strong for over 75 years

Put our expertise to work for you!

Scan for videos →

DGX Specifications

CARRIER [x1000lbs]	MODEL	WEIGHT	JAW CONFIG.	THROAT DEPTH (A)	MOVING JAW WIDTH (B)	FIXED JAW WIDTH (C)	MAX OPENING (D)	OVERALL HEIGHT (E)
09 - 14 t [20 - 31]	**DGX125**	750 [1,650]	2/3	1,133 [45]	430 [17]	850 [33]	1,778 [70]	1,197 [47]
	DGX127	925 [2,050]	3/4		783 [31]	1,102 [43]		
13 - 17 t [29 - 37]	**DGX155**	1,050 [2,300]	2/3	1,308 [51]	580 [23]	980 [39]	2,032 [80]	1,427 [56]
	DGX157	1,275 [2,800]	3/4		856 [34]	1,205 [47]		
	DGX159	1,475 [3,250]	4/5		992 [39]	1,390 [55]		
16 - 24 t [35 - 53]	**DGX205**	1,275 [2,800]	2/3	1,399 [55]	650 [26]	1,100 [43]	2,240 [88]	1,527 [60]
	DGX207	1,475 [3,250]	3/4		900 [35]	1,270 [50]		
	DGX209	1,700 [3,750]	4/5		1,165 [46]	1,505 [59]		
22 - 28 t [48 - 62]	**DGX255**	1,600 [3,550]	2/3	1,501 [59]	714 [28]	1,218 [48]	2,346 [92]	1,638 [64]
	DGX257	1,850 [4,100]	3/4		970 [38]	1,370 [54]		
	DGX259	2,100 [4,650]	4/5		1,203 [47]	1,662 [65]		
26 - 38 t [57 - 84]	**DGX355**	1,975 [4,350]	2/3	1,596 [63]	746 [29]	1,268 [50]	2,588 [102]	1,742 [69]
	DGX357	2,475 [5,450]	3/4		1,124 [44]	1,588 [63]		
	DGX359	2,725 [6,000]	4/5		1,481 [59]	1,723 [68]		
35 - 50 t [77 - 110]	**DGX455**	2,675 [5,900]	2/3	1,800 [71]	845 [33]	1,436 [57]	2,824 [111]	1,967 [77]
	DGX457	3,325 [7,350]	3/4		1,271 [50]	1,795 [71]		
	DGX459	3,800 [8,350]	4/5		1,568 [62]	2,028 [80]		
48 - 60 t [106 - 132]	**DGX605**	3,400 [7,500]	2/3	1,907 [75]	914 [36]	1,552 [61]	2,861 [113]	2,091 [82]
	DGX607	4,225 [9,300]	3/4		1,387 [55]	1,959 [77]		
59 - 90 t [130 - 198]	**DGX855**	4,400 [9,700]	2/3	2,093 [82]	982 [39]	1,667 [66]	2,942 [116]	2,315 [91]
	DGX857	5,400 [11,900]	3/4		1,492 [59]	2,107 [83]		
89 - 125 t [196 - 241]	**DGX1255**	6,500 [14,300]	2/3	2,444 [96]	1,038 [41]	1,771 [70]	3,453 [136]	2,709 [107]
	DGX1257	8,100 [17,900]	3/4		1,631 [64]	2,357 [93]		
150 - 200 t [330 - 440]	**DGX2005**	9,800 [21,600]	2/3	2,709 [107]	1,208 [48]	2,104 [83]	3,718 [146]	2,959 [116]
	DGX2007	12,500 [27,500]	3/4		1,700 [67]	2,400 [94]		

Specifications subject to change *DGX457AK Model Shown (with optional abrasion kit)* *Units of Measure: kg [lb] and mm [in]*

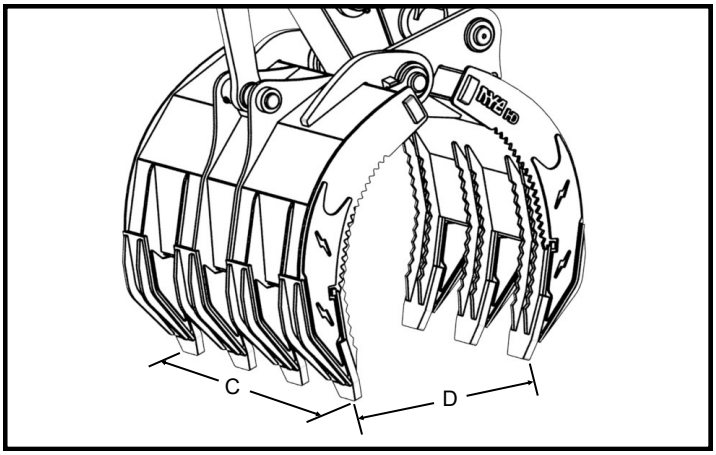

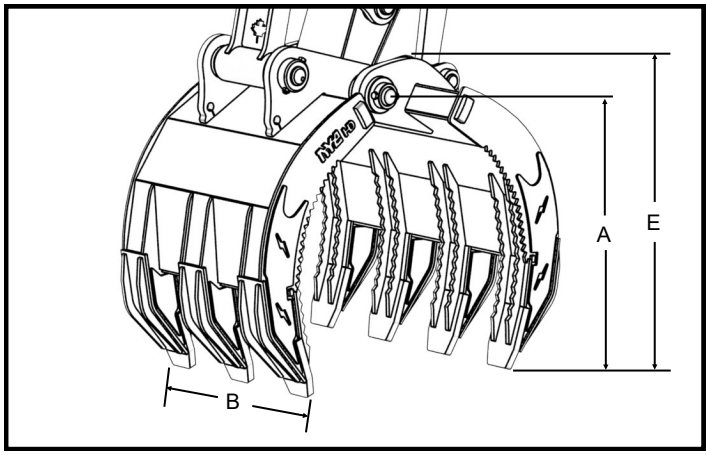

Nye Manufacturing Ltd.
3585 Mavis Rd.
Mississauga, ON L5C 1T7
Canada
+1 905 897 2311
sales@nye.ca nye.ca

Nye is a proud family owned Canadian business; going strong for over 75 years

Scan for videos →

Put our expertise to work for you!