TSX Stump Harvester

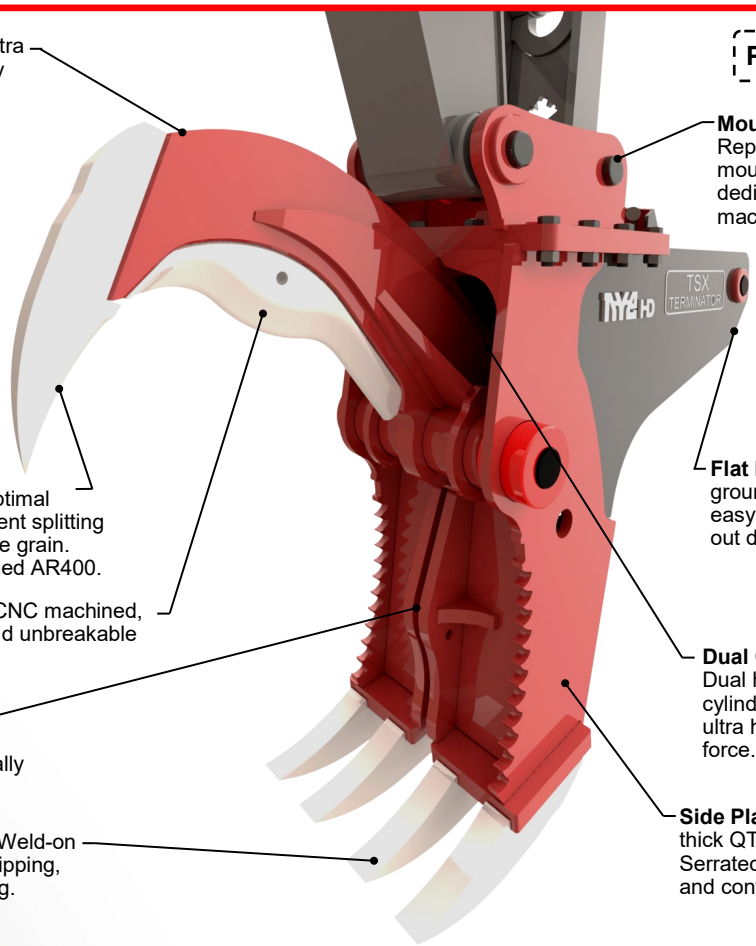

Features & Benefits

- Bolted top mount - no stick bracket required.
- Compatible with existing thumbs.
- Dual high-pressure cylinders - ultra high shear force.
- Extra wide jaw opening for large stumps.
- Proven SHX geometry, with solid CNC profiled blade and teeth.

Extra Wide Opening



Dual Cylinders



Proven Geometry



TSX Series Typical Specifications

Carrier Class	Model	Opening mm [in]	Fang Force (t)	Weight kg [lb]
130 - 290	TSX200	1,090 [43]	19.6	1,540 [3,400]
200 - 400	TSX300	1,295 [51]	28.6	2,335 [5,150]
350 - 500	TSX450	1,560 [61]	40.5	3,495 [7,700]

TSX "Terminator" Stump Harvester:

Featuring the heavy-duty blade, fang, and anvil geometry taken from our proven SHX design.

The TSX gives high performance combined with self-contained mounting that does not interfere with thumbs and other stick mounted equipment.

The AR400 piercing tip and grubbing teeth are virtually indestructible, easily trashing the most stubborn oak and hard maple stumps. All teeth are welded-in, so they can't fall out and damage grinders and other downstream equipment.

The blade uses the same CNC sculpted AR500 convex edge used on our SHX Harvesters. You get the same heavy-duty blade technology, in an ultra powerful, twin cylinder hydraulic harvester.

Dual AR400 anvil plates provide an impacted striking surface for the blade, making quick work of processing and cross-cutting brush, logs, and roots.

For more information call: 905 897 2311

nye.ca/tsx

All Nye products are warranted to be free of defects in materials and workmanship for a period of 2 years or 2,000 hours.
Specifications subject to change.

nye.ca/terms

Nye Manufacturing Ltd.
3585 Mavis Rd.
Mississauga, ON L5C 1T7
Canada
+1 905 897 2311
sales@nye.ca nye.ca

Nye is a proud family owned Canadian business; going strong for over 75 years

Put our expertise to work for you!

Scan for videos →

TSX Stump Harvester

CARRIER CLASS	MODEL	TEETH	FANG FORCE	WEIGHT	TIP RADIUS (A)	WIDTH (B)	OPENING (C)	BLADE (D)
130 - 290	TSX200	2 1/2" Solid AR400	19.6 t	1,540 [3,400]	900 [35]	555 [22]	1,090 [43]	1 1/2" AR500
200 - 400	TSX300	3" Solid AR400	28.6 t	2,335 [5,150]	1,050 [41]	645 [25]	1,295 [51]	2" AR500
350 - 500	TSX450	3 1/2" Solid AR400	40.5 t	3,495 [7,700]	1,245 [49]	675 [27]	1,560 [61]	2 1/2" AR500

Specifications subject to change *Units of Measure: kg [lb] and mm [in]* *Weld-on replacement tips available*

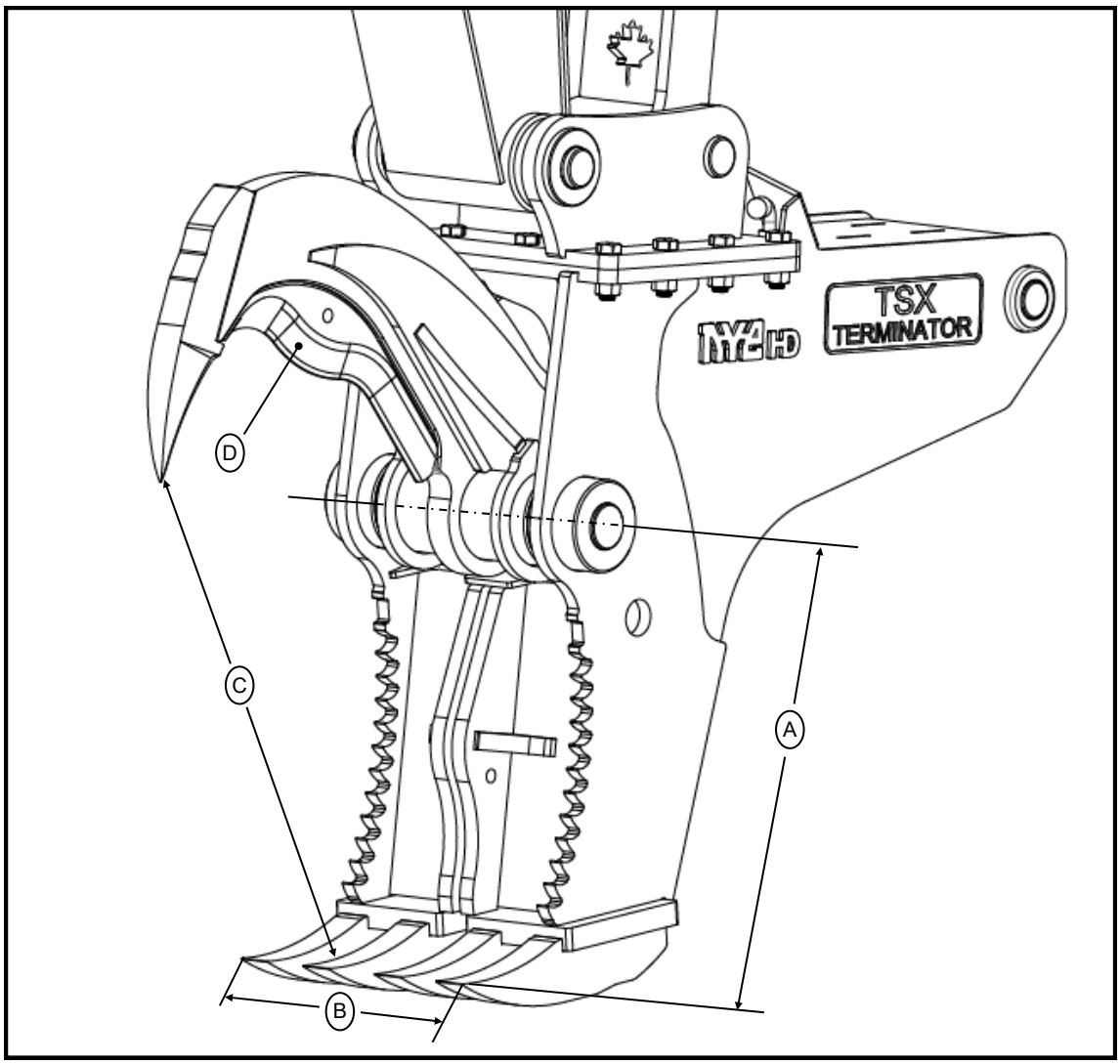

Nye Manufacturing Ltd.
3585 Mavis Rd.
Mississauga, ON L5C 1T7
Canada
+1 905 897 2311
sales@nye.ca nye.ca

Nye is a proud family owned Canadian business; going strong for over 75 years

Put our expertise to work for you!

Scan for videos